JKR 20601-0191-12

KERAJAAN MALAYSIA
JABATAN KERJA RAYA MALAYSIA

SPECIFICATION FOR STRUCTURAL STEELWORKS

KETUA PENGARAH KERJA RAYA
JABATAN KERJA RAYA MALAYSIA
JALAN SULTAN SALAHUDDIN,
50582 KUALA LUMPUR.

CONTENTS

	FOREWORD……...	**iii**
	SCOPE…….	**iv**
	DEFINITIONS……..	**v**
SECTION 1	**GENERAL INFORMATION……..**	**1**
SECTION 2	**SAFETY AND HEALTH……**	**1**
SECTION 3	**QUALITY ASSURANCE……...**	**1**
3.1	Quality System	
3.2	Additional Inspections & Tests	
3.3	Records	
SECTION 4	**MATERIALS……**	**2**
4.1	Material Qualities	
4.2	Material Testing	
4.3	Test Certificates	
4.4	Dimensions and Tolerances	
4.5	Surface Condition	
4.6	Substitution of Material or Section	
4.7	Welding Consumables	
4.8	Structural Fasteners	
4.9	Shear Studs	
4.10	Protective Treatment Materials	
4.11	Proprietary Items	
SECTION 5	**DRAWINGS…….**	**6**
5.1	General	
5.2	General Arrangement Drawings	
5.3	Foundation Plan Drawings	
5.4	Fabrication Drawings	
5.5	Erection Drawings	
5.6	Drawing Approval	
5.7	As-built Drawings	
SECTION 6	**WORKMANSHIP – GENERAL……**	**11**
6.1	Identification	
6.2	Handling	
6.3	Cutting and Shaping	
6.4	Machining	
6.5	Dressing	
6.6	Holes	
6.7	Assembly	
6.8	Curving and Straightening	
6.9	Inspection	
6.10	Storage	
SECTION 7	**WORKMANSHIP – WELDING…….**	**15**
7.1	General	
7.2	Welder Qualification	

7.3	Welding Procedures	
7.4	Assembly	
7.5	Non-destructive Testing of Welds	
7.6	Shear Stud Welding	
Table C	Welds – Scopes of Inspection	
Table D	Weld Quality Acceptance Criteria and Corrective Actions	
SECTION 8	**WORKMANSHIP – BOLTING…….**	**24**
8.1	Ordinary Bolted Assembles	
8.2	Fit-up When Using Ordinary Bolts	
8.3	High Strength Friction Grip Assemblies	
8.4	Fit-up When Using HSFG Bolts	
SECTION 9	**WORKMANSHIP – ACCURACY OF FABRICATION…….**	**27**
9.1	Permitted Deviations	
9.2	Permitted Deviations in Rolled Components after Fabrication	
9.3	Permitted Deviations for Elements of Fabricated Members	
9.4	Permitted Deviations in Plate Girder Sections	
9.5	Permitted Deviations in Box Sections	
SECTION 10	**WORKMANSHIP – ERECTION……...**	**35**
10.1	General	
10.2	Site Conditions	
10.3	Safety	
10.4	Stability	
10.5	Erection Loads	
10.6	Lining and Levelling	
10.7	Site Welding	
10.8	Site Bolting	
10.9	Certification of Completion	
SECTION 11	**WORKMANSHIP – ACCURACY OF ERECTED STEELWORK…….**	**38**
11.1	Foundations	
11.2	Steelwork	
11.3	Information for Other Contractors	
11.4	Permitted Deviations for Foundations, Walls and Foundation Bolts	
11.5	Permitted Deviations of Erected Components	
SECTION 12	**PROTECTIVE TREATMENT……**	**43**
12.1	General	
12.2	Surface Preparation	
12.3	Sprayed Metal Coatings	
12.4	Galvanizing	
12.5	Paint Treatments	
SECTION 13	**FIRE PROTECTION……..**	**47**
	APPENDIX 1: Data Sheet Of Proposed Fire Protection Material…….....	**49**
	ACKNOWLEDGEMENTS…….	**50**

FOREWORD

This specification was revised from JKR Standard Specification for Structural Steelwork No. JKR 20600-0019-99, which was adopted and adapted from the National Structural Steelwork Specification for Building Construction with permission from Steel Construction Institute U.K, for the purpose of advancing the design, manufacture and use of the structural steel in PWD projects.

The primary objective of this specification is to provide PWD engineers and contractors sufficient information to permit safe fabrication, erection and construction procedures in accordance with commonly accepted industry practice.

Users of this specification are encouraged to offer comments to Pengarah Kanan, Cawangan Kejuruteraan Awam, Struktur dan Jambatan on the contents of this publication and suggestions for changes in the next edition.

SCOPE

This specification deals with structural steelwork designed in accordance with MS EN 1993.

It can be used for all types of building construction designed for static loading. It is not intended to be used for steelwork in bridges, offshore structures or other dynamically loaded structures unless appropriate amendments are made.

DEFINITIONS

The following definitions apply for the purpose of this Specification:

Connection Design	The design of bolts, welds, cleats, plates and fittings required to provide an adequate load path between the end of a member and the component it connects to shall be prepared by the Steelwork Sub Contractor unless provided by the S.O..
Design Calculations	Calculations showing the design and analysis of the structure, including computer data sheets.
Design Drawings	Fully dimensioned drawings showing all members with their size and material grades, the forces to be developed in their connections, any cambers and eccentricities and other information necessary for the design of the connections and completion of Fabrication and Erection Drawings.
Erection Drawings	Drawings, prepared by the Steelwork Sub Contractor, showing details to amplify the information given in the Steelwork Sub Contractor's erection method statement and showing details of any temporary steelwork. (see clauses 10.1.1 and 10.4)
Fabrication Data	Numerical control tapes, computer discs, data bases or other electronic means of communication for automatic methods of fabrication.
Fabrication Drawings	Drawings, prepared by the Steelwork Sub Contractor, showing all necessary information required to fabricate the structural steelwork.
Fittings	Plates, flats or rolled sections which are welded or bolted to structural steel components.
Foundation Plan Drawings	Drawings indicating location of column bases, column service loads and details of foundation connections to the steelwork.
General Arrangement Drawings	Drawings showing plans, cross sections and elevations, main dimensions and the erection marks of components.
Inspection Authority	A qualified independent body or association which certifies welders' certification and compliance with welding procedures.

Steelwork Sub Contractor	The company appointed to fabricate and/or erect the structural steelwork. Where required, the Steelwork Sub Contractor may also be responsible for design.
Ordinary Bolts	A bolt used in a non-preloaded bolt assembly which is designed to carry forces in shear, bearing or tension.
Production Test Plate	A plate used for testing purposes, which is made of the same material and using the same procedures as the joint in a component.
Professional Engineer (P.E.)	An appointed P.E. by the Contractor or the Steelwork Sub Contractor, who has a valid registration with the Board of Engineers, Malaysia (BEM) and still permitted to practice in the registered field. The P.E. is responsible for the structural design and for reviewing and accepting the detail drawings and erection method statement.
Quality Assurance	Activities concerned with the provision of systems, equipment and personnel necessary to achieve the required level of quality.
Site	The area defined within which the construction works will be conducted.
The Works	As defined in the Contract Document, but limited in the context of this document to the structural steelwork.

Welding terms:

Fillet Weld	A weld, other than a butt or edge weld, which is approximately triangular in transverse cross section and which is generally made without preparation of the parent material.
Full Penetration Weld	A weld between elements which may be in-line, in the form of a tee, or a corner in which the weld metal achieves full penetration throughout the joint thickness.
Partial Penetration Weld	A weld formed using a technique which ensures a specified penetration which is less than the depth of the joint.
Full Strength Weld	Any of the above welds designed to develop the full strength of the element which it connects.

Fire Protection:

Intumescent coating	Coating which reacts under the influence of heat by swelling in a controlled manner to many times its original thickness and producing a layer of carbonaceous char or foam which acts as an insulating layer for the substrate.
Primer	Interface coatings between the intumescent coating and the substrate.
Top sealer coat	Material applied to the surface of the intumescent coating as a protection against environmental degradation.
Decorative coat	Material used for decorative purposes only.

1.0 GENERAL INFORMATION

All materials shall conform to the relevant British Standards and equivalent standards may be accepted with the approval of the S.O..

2.0 SAFETY AND HEALTH

The Contractor or the Steelwork Sub Contractor carrying out the Works shall comply with all relevant regulations given in the Factories And Machinery Act 1967 (Act 139) and Occupational Safety And Health Act 1994 (Act 514).

3.0 QUALITY ASSURANCE

3.1 Quality System

3.1.1 System Requirements

The Contractor shall have a management system to ensure that his responsibilities for design, detailing, fabrication and erection of steel components and structures conform to the requirements of the Contract and this Specification.

3.1.2 Scope

The system shall cover all procedures including:

(i) project management and planning;
(ii) design control;
(iii) documentation control;
(iv) material purchasing;
(v) detail drawing preparation;
(vi) fabrication;
(vii) inspection and testing;
(viii) surface preparation and protective treatment;
(ix) erection;
(x) safety and health;
(xi) records.

3.1.3 System Acceptance

The system shall be open to audit by the S.O. or registered by an approved certified body such as SIRIM for compliance with ISO 9000.

3.2 Additional Inspections and Tests

The Contractor shall provide the necessary facilities for any of the tests and inspections as requested by the S.O..

3.3 Records

All records made in accordance with the system described in clause 3.1 shall be available for the S.O. to examine during the contract period.

4.0 MATERIALS

4.1 Material Qualities

Material shall be steel in ROLLED SECTIONS, STRUCTURAL HOLLOW SECTIONS, PLATES and BARS and shall comply with the appropriate standards shown in Table A and Table B.

4.2 Material Testing

All steel shall have been specifically tested in accordance with the appropriate material quality standard shown in Table A.

4.3 Test Certificates

The Contractor shall obtain the manufacturer's test certificates and submit to the S.O. before any structural steel can be approved.

4.4 Dimensions and Tolerances

Dimensions and tolerances shall comply with the appropriate standards shown in Table A.

TABLE A - MATERIAL & DIMENSION STANDARDS			
Form	**Material Quality**	**Dimensions**	**Dimension Tolerances**
H – Section	BS EN 10025[1]	BS 4-1	BS EN 10034
Joists		BS 4-1	BS EN 10024
Channels		BS 4-1	BS EN 10279
Angles		BS EN 10056-1	BS EN 10056-2
Plates And Flats		Not Applicable	BS EN 10029[3]
Structural Hollow Sections	BS EN10210-1[2]	BS EN 16210-2	BS EN 16210-2
Hollow Sections Cold Formed	BS EN 10219-2	BS EN 10219-2	BS EN 10219-2
Galvanized Open Sections & Strip	BS EN 10346	Not Applicable	BS EN 10143

Notes :

1. Material quality requirements for fine grain steels are given in BS EN 10025. Material quality requirements for weather resistant grades are given in BS EN 10025.
2. BS EN 10210–1 contains material quality requirements for non-alloy and fine grain steels.
3. Tolerances for plates cut from wide strip produced on continuous mills are given in BS EN 10051.

TABLE B – STEEL GRADE		
BS 5950 : Part 1	BS 4360	BS EN's
Design Grade 43	43	S275
Design Grade 50	50	S355
Design Grade 55	55	S460

4.5 Surface Condition

(i) Steel surface when used shall not be more heavily pitted or rusted than Grade C of BS EN ISO 8501-1.

(ii) Surface defects in hot rolled sections, plates and wide flats revealed during surface preparation which are not in accordance with the requirements of BS EN 10163 shall be rectified accordingly.

(iii) Surface defects in hot rolled hollow sections revealed during surface preparation which are not in accordance with the requirements of BS EN 10210-1 shall be rectified accordingly.

4.6 Substitution of Material or Section

Material quality or section form of components may with the approval of the S.O. be substituted where it can be demonstrated that the structural properties are not less suitable than the designed component.

4.7 Welding Consumables

4.7.1 Standards

Consumables for use in metal arc welding shall comply with BS EN ISO 2560, BS EN ISO 14341, BS EN ISO 636, BS EN 14171, BS EN 14174 or BS EN ISO 17632 as appropriate.

4.7.2 Storage

Consumables to be stored in the Contractor's work place and also on the Site, shall be kept in a controlled atmosphere in accordance with BS EN 1011-1. Any drying or baking of consumables before issue shall be carried out in accordance with the manufacturer's recommendations.

4.8 Structural Fasteners

4.8.1 Ordinary Bolts Assemblies

Shop and site bolts and nuts shall be to the following grades:

(i) Grade 4.6 in accordance with BS 4190, or

(ii) Grade 8.8 or 10.9 in accordance with BS 3692 but with dimensions, tolerance and threaded length to BS 4190

Note: see clause 8.1.1 for bolt/nut combinations.

4.8.2 High Strength Friction Grip (HSFG) Bolt Assemblies

HSFG bolt assemblies shall be accordance with BS EN 14399.

Note: see clause 8.3.1 for bolt/nut/washer combinations.

4.8.3 Foundation Bolts

Holding down bolts shall be in accordance with BS 7419.

4.8.4 Cup and Countersunk Bolts

Cup and countersunk bolts shall be in accordance BS 4933.

4.8.5 Washers

Metal washers shall be made in accordance with BS 4320 Section 2.

Unless otherwise specified, black steel washers to Form E shall be used.

(see clause 5.4.7 for washers for holding down bolts)

4.8.6 Locknuts

Locknuts shall be accordance with BS 4929-1, BS EN ISO 7042, BS EN ISO 2320 or BS EN ISO 7719.

4.8.7 Fastener Coatings

Where specific coatings are required, they shall be provided by the fastener manufacturer.

4.9 Shear Studs

Proprietary studs used in composite construction shall be the headed type with the following properties after being formed:

(i) Minimum yield strength of 350N/mm^2;
(ii) Minimum ultimate tensile strength of 450N/mm^2;
(iii) Elongation of 15% on a gauge length of 5.65 $\sqrt{A}$, where A is the area of the test specimen.

4.10 Protective Treatment Materials

4.10.1 Metallic Blast Cleaning Abrasives

Chilled iron grit shall be in accordance with BS 7079 Part E2, and cast grit shall be in accordance with BS 7079 Part E3.

4.10.2 Surface Coatings

Paint materials and other coatings supplied shall be in accordance with the appropriate British Standard or European Standard.

4.10.3 Sherardized Coatings

Sherardized coatings shall be in accordance with BS 4921.

4.10.4 Galvanizing Materials

The composition of zinc in galvanizing baths shall be in accordance with BS EN ISO 1461.

4.11 Proprietary Items

All proprietary items shall be used in accordance with the manufacturer's recommendations and instructions.

5.0 DRAWINGS

5.1 General

5.1.1 British Standards

All design, fabrication and erection drawings shall be made in accordance with BS 1192-1 and BS 1192-2.

Where welding symbols are used, they shall conform to BS 499-2.

5.1.2 Revisions

Revised drawings shall have a suffix letter added to the number and a description of the notes stating the changes that have been made and the date.

The drawing office system shall ensure that the revised drawings are issued and the earlier copies withdrawn or clearly marked "superseded".

5.2 General Arrangement Drawings

5.2.1 Marking System

Every component which is to be individually assembled or erected shall be allocated an erection mark.

Members which are identical in all respects may have the same erection mark.

5.2.2 General Arrangement Drawings (Marking Plans)

Drawings shall be prepared by the Contractor showing plans and elevations at a scale such that the erection marks for all members can be shown on them. Preferred scales are 1:100 or larger.

The drawings shall show the grid locations as indicated on the design drawings, main dimensions, member levels and centre lines. Details at an enlarged scale should also be made if these are necessary to show the assembly of members.

5.3 Foundation Plan Drawings

Foundation Plan Drawings shall show the base location, column service loads, position and orientation of columns, the marks of all columns, any other members in direct contact with the foundations, their base location and level, and the datum level.

The drawings shall show complete details of fixing steel or bolts to the foundations, method of adjustment and packing space.

5.4 Fabrication Drawings

5.4.1 Fabrication Shop Drawings

Fabrication Drawings shall show all necessary details and dimensions to enable fabrication of components to proceed.

5.4.2 Drawing Register

A drawing register shall be made and used for the control and issue of drawings. It shall incorporate a system so that erection marks of the components can be readily identified with each drawing.

5.4.3 Attachments to Facilitate Erection

The Fabrication Drawings shall show details of holes and fittings necessary to comply with the safety requirements of the BCSA Code of Practice for Erection of Low Rise Buildings or Guide to the Erection of Multi-Storey Buildings, and to provide for lifting and erection of components (see clause 10.1.1).

Unless specifically agreed otherwise, such holes and fittings may remain on the permanent structure. Account shall be taken of clause 7.4.5 when detailing the welding of temporary attachments.

5.4.4 **Welding**

(i) Any requirements for edge preparations for welds shall be indicated on the Fabrication Drawings.

(ii) Welding inspection requirements which differ from those specified in clause 7.5.5 shall be indicated on the drawings.

5.4.5 **Packings, Clearances and Camber**

When preparing Fabrication Drawings, the Contractor shall make provision for:

(i) Packings which may be necessary to ensure proper fit-up of joints (see clauses 8.2.1 and 8.4.1).

(ii) The need for clearances between the fabricated components so that the permitted deviations in fabrication and erection are not exceeded, (see Sections 9 and 11).

(iii) The specified requirements for pre-set or cambers to be provided in fabrication so that continuous frames and other steelwork can be erected to the required geometry.

5.4.6 **Hole Sizes**

Holes shall be shown on the Fabrication Drawings to the following sizes:

(i) For ordinary bolts and HSFG bolts:

not exceeding 24mm diameter	-	2mm greater than the bolt diameter.
greater than 24mm diameter	-	3mm greater than the bolt diameter.

(ii) For holding down bolts:

6mm greater than the bolt diameter, but with sufficient clearance to ensure that a bolt, whose adjustment may cause it to be out of perpendicular, can be accommodated through the base plate (see clause 11.4.3).

(iii) For fitted bolts: in accordance with clause 8.1.8.

5.4.7 Holding Down Bolt Covers

Holding down bolt details shall include provision of loose cover plates or washers with holes 3mm greater than the holding down bolts.

5.4.8 Connections to Allow Movement

Where the connection is designed to allow movement, the bolt assembly used shall remain secure without impeding the movement.

5.4.9 Drilling Note

The Shop Drawings shall indicate those locations where holes shall be drilled as indicated in the drawings (see also clause 6.6.3):

(i) in non-slip connections for HSFG bolts;

(ii) at locations where plastic hinges are assumed in the design analysis;

(iii) in elements of rigid connections where yield lines are assumed;

(iv) where repetition of loading makes fatigue critical to the member design;

(v) where the design code of practice does not permit punched holes.

5.4.10 HSFG Faying Surfaces

When considering the coefficient of friction to use in the design of high strength friction grip bolted connections, the following values are to be used:

(i) unless the S.O. advises otherwise or specified, untreated surfaces which are in accordance with BS 4604 may be considered as having a slip factor of 0.45; masking shall be used to keep the surfaces free of protective treatments.

(ii) surfaces which have been machined, or given any type of treatment, shall have the slip factor determined by tests carried out in accordance with BS EN 1993-1-8.

5.5 Erection Drawings

5.5.1 Erection Method Statement

The Contractor shall submit his method statement and prepare Erection Drawings.

5.5.2 Temporary Steelwork

Details and arrangements of temporary steelwork for erection purposes shall be shown on the Erection Drawings.

5.6 Drawing Approval

5.6.1 Approval by the S.O.

Drawings made by the Contractor shall be submitted to the S.O. for approval in the period designated by the S.O..

Approval by the S.O. of drawings prepared by the Contractor means that the Contractor has correctly interpreted the design requirements and that the S.O. approves the Connection Design.

Approval does not relieve the Contractor of the responsibility for accuracy of his calculations, detail dimensions on the drawings, nor the general fit-up of parts to be assembled on site.

5.6.2 Contractor's Drawings

Unless connections and other details are provided or where the Contractor is required to design any structural member/truss or temporary support system, the Contractor shall engage an approved structural steelwork fabricator to design such details and prepare fabrication drawings as mentioned in Section 4.4.

5.6.3 Contractor's Submission

Prior to fabrication, the Contractor shall submit the following documents and details for the S.O.'s approval:-

a. The design plan defining the principal design activities in a logical sequence, type of design output, target dates to meet the programme requirements and allocation of design responsibilities.
b. Design documentation, production and checking procedures (verification).
c. Fabricator's certification that the software used has been validated.
d. Method Statement for handling and transportation requirements for unusually shaped or large components to ensure stability during movement.
e. A report of the design review before the issuance of detailed drawings.

5.7 As-built Drawings

On completion of the contract, the Steelwork Sub Contractor shall provide the S.O. with two (2) sets of paper prints and one set of digital format in CD form of as-built drawings comprising:

General Arrangement Drawings
Fabrication Drawings
Drawings made after fabrication showing revisions
The fabrication drawing register

6.0 WORKMANSHIP – GENERAL

6.1 Identification

6.1.1 Traceability of Steel

All steel to be used in The Works shall have a test certificate (see clause 4.3).

6.1.2 Material Grade Identification

The material grades of steel shall be identifiable.

6.1.3 Marking Steelwork

(i) Individual pieces shall be capable of positive identification at all stages of fabrication.

(ii) Completed components shall be marked with a durable and distinguishing erection mark in such a way as not to damage the material. Hard stamping may be used, except where otherwise specified by the P.E..

Where areas of steelwork are indicated on the drawings as being unmarked, they shall be left free of all markings and hard stamping.

6.2 Handling

Steelwork shall be bundled, packed, handled and transported in a safe manner so that permanent distortion does not occur and surface damage is minimised.

6.3 Cutting And Shaping

6.3.1 Cutting Operations

Cutting and shaping of steel may be carried out by shearing, cropping, sawing, nibbling, laser cutting or machine flame cutting, except that where machine flame cutting is impractical, hand flame cutting may be used.

6.3.2 Flame-cut Edges

Flame-cut edges which are free from significant irregularities shall be accepted without further treatment except for the removal of dross, otherwise cut edges shall be dressed to remove irregularities.

6.3.3 Columns

(i) Columns with ends not in direct bearing or intended to be erected on packs or shims shall be fabricated to the accuracy given in clause 9.2.2.

(ii) Columns intended to be in direct bearing shall be fabricated to the accuracy given in clause 9.2.3.

(iii) Column sections which are less than one metre in width or depth and are intended to be in direct bearing, shall be specially prepared at the butting ends so that the erection tolerances in clauses 11.5.4 and 11.5.5 can be achieved.

6.4 Machining

6.4.1 Thickness of Machined Parts

The thickness of elements shown on the drawings as requiring machining shall be the minimum thickness after the machining operations.

6.5 Dressing

6.5.1 Removal of Burrs

Cut edges shall be dressed to remove dross, burrs and irregularities. Holes shall be dressed as required to remove burrs and protruding edges.

6.5.2 Dressing of Edges

Sharp edges shall be dressed, but a 90˚ rolled, cut, sheared or machined edge is acceptable without further treatment.

6.6 Holes

6.6.1 Matching

All matching holes for fasteners or pins shall register with each other so that fasteners can be inserted without undue force through the assembled members in a direction at right angles to the faces in contact. Drifts may be used but holes shall not be distorted.

6.6.2 Drilling Through More Than One Thickness

Drilling shall be permitted through more than one thickness where the separate parts are tightly clamped together before drilling. The parts shall be separated after drilling and any burrs removed.

6.6.3 Punching Full Size

Full size punching of holes shall be permitted when:

(i) the tolerance on distortion of the punched hole does not exceed that shown in clause 9.3.3;

(ii) the holes are free of burrs which would prevent solid seating of the parts when tightened;

(iii) the thickness of the material is not greater than the hole diameter;

(iv) the maximum thickness for all steel grades used from the standards listed in Table A, Section 4 is:

12mm for sub-grade A
16mm for sub-grade B
20mm for sub-grade C or higher sub-grade;

(v) in spliced connections when the holes in mating surfaces are punched in the same direction.

6.6.4 Punching and Reaming

Punching is permitted without the conditions in clause 6.6.3, provided that the holes are punched at least 2mm less in diameter than the required size and the hole is reamed to the full diameter after assembly.

6.6.5 Slotted Holes

Slotted holes shall be made by one of the following methods:

(i) punched in one operation;

(ii) formed by drilling two holes and completed by cutting;

(iii) machine operated flame cutting.

6.6.6 Holes Details

Details of cut-outs, holes or fittings required for use must be indicated by the Contractor.

6.7 Assembly

All components shall be assembled within tolerances specified in Section 9 and in a manner such that they are not bent, twisted or otherwise damaged.

Drifting of holes to align the components shall be permitted, but must not cause damage or distortion to the final assembly (see clause 8.2.2).

6.8 Curving and Straightening

Curving or straightening components during fabrication, shall be performed by one of the following methods:-

(i) mechanical means, taking care to minimize indentations, or change of cross-section;

(ii) the local application of heat, ensuring that the temperature of the metal is carefully controlled, and does not exceed 650˚C;

(iii) the induction bending process where the procedure used includes careful temperature control;

(iv) after curving or straightening, weld within the area of curving or straightening shall be visually inspected. Welds which are to be subject to non-destructive examination shall have these tests carried out after curving or straightening.

6.9 Inspection

All components shall be checked for dimensional accuracy and conformity to drawing to prove that the manufacturing process is working satisfactorily.

6.10 Storage

6.10.1 Stacking

Fabricated components which are stored prior to being transported or erected shall be stacked clear off the ground, and arranged if possible so that water cannot accumulate. They shall be kept clean and supported in such a manner as to avoid permanent distortion.

6.10.2 Visible Markings

Individual components shall be stacked and marked in such a way as to ensure that they can be identified.

7.0 WORKMANSHIP – WELDING

7.1 General

Welding shall be a metal arc process in accordance with BS EN 1011, as appropriate; together with other clauses contained in this section, unless otherwise specially permitted by the S.O..

Welding consumables used shall be chosen to ensure that the mechanical properties of the weld metal are not less than those required for the parent metal.

Joints shall be prepared in accordance with BS EN 1011. Precautions shall be taken to ensure cleanliness of the connection prior to welding.

7.2 Welder Qualification

7.2.1 Testing

Welders shall be tested at an approved Institution to meet the requirements of BS EN 287-1 but, in the case of welders engaged on fillet welding only, BS 4872-1 is an acceptable alternative.

The Contractor shall appoint an independent Inspection Authority to endorse the welder's certification and also to approve the welding procedures and test procedures for welding works.

Welding inspection and testing shall be carried out by an independent Welding Inspector who holds a valid certificate of competence from a nationally recognized body such as SIRIM and CIDB or other established recognized private organization. Notwithstanding such inspection by the independent Welding Inspector, the S.O. may at his absolute discretion carry out any test to verify the integrity of the weld.

7.2.2 Certification

Welder testing shall be witnessed and certificates endorsed by an independent Inspection Authority.

The certification shall remain valid providing it complies with the conditions for re-approval of certification specified in BS EN 287-1.

7.3 Welding Procedures

7.3.1 Preparation of Procedures

Approved written welding procedures shall be available in accordance with BS EN 1011, and tested in accordance with BS EN ISO 15614-1 by the Contractor.

7.3.2 Approval of Procedures and Procedure Tests

Procedures and tests shall be approved by an independent Inspection Authority.

7.3.3 Availability of Welding Procedure Sheets

Welding Procedure sheets shall be made available to the welder prior to the commencement of the work and shall be available to the S.O. and Inspection Authority on request.

7.4 Assembly

7.4.1 Fit-up

Joints shall be fitted up to the dimensional accuracy required by the welding procedure, depending on the process to be used, to ensure that the quality in Table D is achieved.

7.4.2 Jigs

Fabrications assembled in jigs may be completely welded in the jig, or may be removed from the jig after tack welding.

7.4.3 Tacks Welds

(i) Tacks welds shall be made using the same procedures as for the root runs of main welds. The length of the tack shall be the lesser of 4 times the thickness of the thicker part or 50mm unless demonstrated by a weld procedure qualification.

(ii) Tack welds which are not defective may be incorporated into main welds provided that the welder is qualified as in clause 7.2. However, where joint are welded using an automatic or mechanised process, the suitability of the tack weld used for incorporation into automatic processes shall be demonstrated in the weld procedure qualification.

(iii) Where tack welds are made in circumstances other than those identified above, they must be removed.

7.4.4 Distortion Control

The sequence of welding a joint or a sequence of joints shall be such that distortion is minimised (see Section 9).

7.4.5 Fabrication or Erection Attachments

Welding of attachments required for fabrication or erection purposes shall be made in accordance with the requirements for a permanent weld.

When removal is necessary, they shall be flame cut or gouged at a point not less than 3mm from the surface of the parent material. The residual material shall be ground flush and the affected area visually inspected. When thicknesses are greater than 20mm, it shall also be checked by magnetic particle inspection. Acceptance criteria are as set out in Table D. Attachments shall not be removed by hammering. (See clause 5.4.3).

7.4.6 Extension Pieces

Where the profile of weld is maintained to the free end of a run by the use of extension pieces they shall be of material of a similar composition, but not necessarily the same grade, as the component. They shall be arranged so as to provide continuity of preparation and shall be removed after completion of the weld and the surface ground smooth.

7.4.7 Production Test Plates

Where production test plates are required for testing purposes, they shall be clamped in line with the joint. The grade of material and rolling direction shall match the parent plate, but need not be cut from the same plates or cast.

7.5 Non-destructive Testing of Welds

7.5.1 Record of Testing

The test result shall be recorded and be available for inspection by the S.O..

7.5.2 Visual Inspection of Welds

(i) Visual inspection shall be made in accordance with guidance given in BS EN ISO 17637 over the full length of the weld and before NDT inspection is performed (see Table C and Table D).

Any welds which will be rendered inaccessible by subsequent work shall be examined in accordance with Tables C and Table D prior to the loss of access.

(ii) A suitably qualified person for visual inspection of welds may be a welding inspector or a welder who can provide evidence of having been trained and assessed for competence in visual inspection of the relevant types of welds.

7.5.3 Surface Flaw Detection

(i) Where a closer examination of a weld surface is required in accordance with Table C, magnetic particle inspection (MPI) shall be used in accordance with the recommendations given in BS EN ISO 9934-1.

If magnetic particle inspection equipment is not available, dye penetrant inspection (DPI) may be used in accordance with the recommendations given in BS EN 571-1.

Final surface flaw detection of a welded joint shall be carried out not less than 16 hours from the time of completion of the weld to be inspected, or not less than 40 hours in the case of welds to Design Grade 55 material.

Note: Where a welding procedure requires an inspection after initial weld runs before further welding is performed, such inspection may be carried out when the weld metal has cooled to ambient temperature.

(ii) A suitably qualified person for surface flaw detection of welds may be a welding inspector or a welder who holds a current certificate of competence in surface flaw detection of the relevant types of work, from a nationally recognized authority.

7.5.4 Ultrasonic Examination

(i) Where ultrasonic examination is required in accordance with Tables C and D, it shall be made in accordance with BS EN ISO 17640.

Examination shall be carried out not less than 16 hours from the time of completion of the weld to be inspected, or not less than 40 hours in the case of butt welds thicker than 40mm or any welds to design Grade 55 material.

(ii) Operators carrying out final ultrasonic examination of the weld shall hold a current certificate of competence from a nationally recognized authority

7.5.5 Scope of Inspection

The scope of inspection shall be in accordance with Table C.

7.5.6 Acceptance Criteria and Corrective Action

Acceptance criteria, corrective action and re-testing shall be in accordance with Table D for components subject to static loading.

7.6 Shear Stud Welding

7.6.1 Method

Shear studs shall be welded in accordance with the manufacturer's recommendations for materials, procedures and equipment.

7.6.2 Trial Welding

(i) When specified by the S.O. and before production welding of studs commences, procedure trials shall be carried out. The trials shall be made on samples of material and studs representative of those to be used in the work. The samples of materials and studs shall be agreed with the S.O..

(ii) Where primers are to be applied to the work prior to the welding of studs they shall be applied to the sample material before the procedure trials are made.

7.6.3 Tests and Inspection

(i) All studs are to be visually inspected. They shall show a full 360° collar.

(ii) At locations agreed with the S.O., a minimum of 5% studs which have satisfied the visual inspection shall have a bend test.

The bend test shall be made by striking the head of the stud with a 6kg hammer until it is displaced laterally a distance of about one quarter of the height of the stud.

The stud weld shall not show any signs of cracking or lack of fusion.

(iii) Studs subjected to the bend test shall not be straightened.

7.6.4 Defective studs

Studs with defective welding shall be removed in the manner described in clause 7.4.5, and replaced and re-tested as in clause 7.6.3.

TABLE C - WELDS - SCOPE OF INSPECTION

The requirements of this table shall not preclude the use of Non-Destructive Testing outside the limits shown should the results of visual inspection or NDT indicate that a lapse in quality may have occurred in specific joints.

PART A	VISUAL INSPECTION	Prior to Non-Destructive Testing, all welds to be visually inspected by a suitably qualified person (See Clause 7.5.2)

PART B		THICKNESSES WHEN NON-DESTRUCTIVE TESTING BECOMES MANDATORY (All dimensions in mm)				
WELD TYPE		BUTT (full, partial penetration & with reinforcing fillets.)				
JOINT TYPE		IN-LINE		TEE and CRUCIFORM		CORNER
PROCEDURES		Single sided	Double sided & Single sided plus backing	Single sided	Double sided & Single sided plus backing	ALL
		Examples 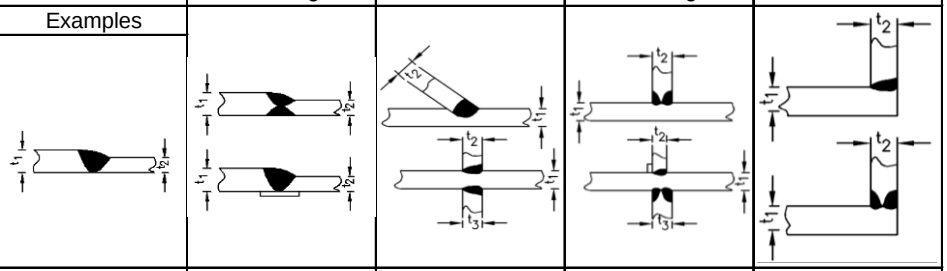				
	Design Grade					
MPI	43/ 50	$t_{max} < 10$	$t_{max} < 12$	$t_{max} \geq 20$	$t_{max} \geq 20$	$t_{max} \geq 20$
	55	$t_{max} < 10$	$t_{max} < 10$	$t_{max} \geq 15$	$t_{max} \geq 15$	$t_{max} \geq 15$
U/S	43/ 50	$t_{max} \geq 10$	$t_{max} \geq 12$	$t_{max} \geq 12$	$t_{max} \geq 30$	$t_{max} \geq 30$
	55	$t_{max} \geq 10$	$t_{max} \geq 10$	$t_{max} \geq 10$	$t_{max} \geq 20$	$t_{max} \geq 20$

WELD TYPE		FILLET	
JOINT TYPE		LAP	TEE and CRUCIFORM
PROCEDURES		ALL	ALL
		Examples 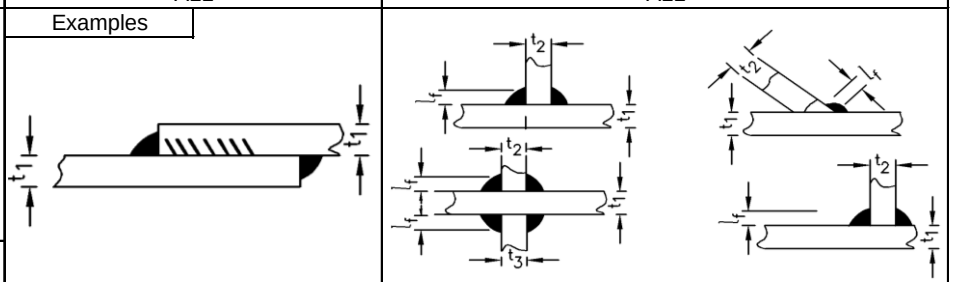	
	Design Grade		
MPI	43/ 50	$t_{max} \geq 20$	$t_{max} \geq 20$
	55	$t_{max} \geq 15$	$t_{max} \geq 15$
U/S	43/ 50	Not Mandatory	$l_{fmax} \geq 20$
	55	Not Mandatory	$l_{fmax} \geq 15$

Notation:-
- MPI Magnetic Particle Inspection (see Clause 7.5.3)
- U/S Ultrasonic Examination (see Clause 7.5.4)
- < Less than
- ≥ Greater than or equal to

TABLE C Continued

PART C	FREQUENCY OF TESTING OF JOINTS IDENTIFIED IN PART B		
CONNECTION ZONES	Shop Welds	**First 5** identified joints of each type having same basic dimensions, material grades and weld geometry and welded to the same procedures. *Thereafter:* **1 in 5** joints of each type (if the first 5 have complied with Table D)	
	Site Welds	All identified joints	
MEMBER ZONES	Built-up Members	Transverse butts in web and flange plates before assembly	As for shop welds in Connection Zones
		Transverse fillet welds at ends of cover plates	
		Longitudinal welds	**0.5m** in each **10m** or part thereof
	Secondary Attachment Welds	e.g. for fixing purlins, side rails, buckling stiffeners etc.	**1 in 20** Attachments

Note:- Where only partial inspection is required, the joints for testing shall be selected on a random basis, but ensuring that sampling covers the following variables as widely as possible: Joint Type, material Grade & Welding Equipment.

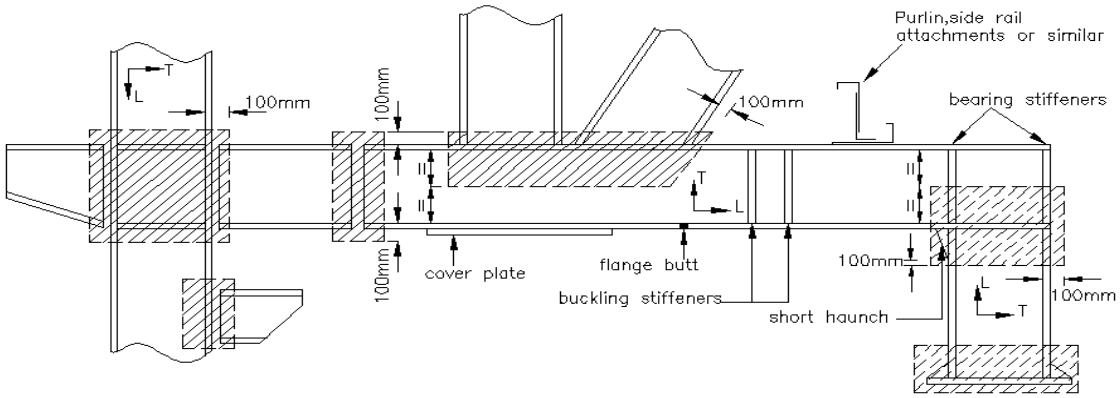

DEFINITION OF ZONES AND WELD ORIENTATIONS

Connection zones - all welds transverse

Member zones - welds transverse or longitudinal

T = Transverse to Member Axis (any direction)

L = Longitudinal (parallel to Member Axis)

TABLE D - WELD QUALITY ACCEPTANCE CRITERIA & CORRECTIVE ACTIONS

	PARAMETER	WELD TYPE	PARTICULAR CONDITIONS	ACCEPTANCE REQUIREMENTS (All dimensions in mm) (NOTE 1 & 5)	Fig	REMEDIAL ACTION FOR NON-CONFORMING WELDS (NOTE 2)
WELD GEOMETRY	Location	ALL		As specified on drawings		Repair
	Weld Type	ALL		As specified on drawings		Refer to Engineer
	Length	ALL		$\not<$ As specified on drawings		Repair
PROFILE	Throat Thickness	Butt		$t_b \not< $ As drawing (Av. 50)	b, c	Repair
		Fillet		$t_f \not< $ As drawing (Av. 50) $\not> $ As drawing + 5	a	Repair or grind and MPI after grinding
	Leg Length	Fillet		$l_f \not< $ As drawing	a	Repair
	Toe Angle	ALL		$\theta \not< 90°$	a	Grind and MPI after Grinding
	Cap/ Root Bead (Height or concavity)	Butt	Butt Joint	$-1 \not> C_b \not> 4$	b, c	Repair or grind and MPI after grinding
	Misalignment	Butt	Butt Joint	$m \not> $ As drawing + 0.25t $\not> $ As drawing + 3	d	Refer to Engineer
		ALL	Cruciform Joint	$m \not> $ As drawing + 0.50t and $\not> $ As drawing + 6	e	
SURFACE DISCONTINUITIES	Undercut	ALL	Longitudinal Weld	$U_1 + U_2 \not> 0.1t$ (Av. 100) and $\not> 2$	d, e d, e	Repair
			Transverse Weld	$U_1 + U_2 \not> 0.05t$ (Av. 100) and $\not> 1$	d, e d, e	
	Root Penetration (Lack of)	Single Sided Butt	Longitudinal Weld	$r_p \not> $ As drawing + 0.1t (Av. 100) and $\not> $ As drawing + 3	c	Repair and double scope of Ultrasonic inspection if root inaccessible
			Transverse Weld	$r_p \not> $ As drawing + 0.05t (Av. 100) and $\not> $ As drawing + 2	c	
	Porosity	ALL	ALL Welds	$d \not> 3$	f	Repair
			Longitudinal Weld	$\sum d \not> 20$ in 100 (length)	f	
			Transverse Weld	$\sum d \not> 10$ in 100 (length)	f	
	Lack of Fusion & Cracks	ALL		NOT PERMITTED		Repair and increase MPI to 100% (Note 4)
SUB-SURFACE DISCONTINUITIES	Slag Lines & Lack of Fusion/ Root Penetration	ALL	ALL Welds	$h \not> 3$ + As drawing $l \not> 10$ } if h' < 6 $l' \not< 10$ } if h' < 6	e, g g g	Repair & double scope of U/S inspection
			Longitudinal Weld	$\sum l \not> 6t$ in 200 (length)	g	
			Transverse Weld	$\sum l \not> 3t$ in 200 (length)	g	
	Root Gap	Fillet or Partial Pen. Butt	Tee, Cruciform, Corner & Lap Joints	$r_g \not> 2$ (Av. 100) and $\not> 3$	a, e a, e	Repair & double scope of U/S inspection
	Cracks	ALL		NOT PERMITTED		Repair & increase U/S inspection to 100%
	Lamellar Tears	ALL	Tee, Cruciform, Corner & Lap Joints	NOT PERMITTED (Note 3)		Refer to Engineer & increase U/S inspection to 100%

TABLE D Continued

DIMENSIONAL SYMBOLS
DEFINITION OF MEASUREMENTS

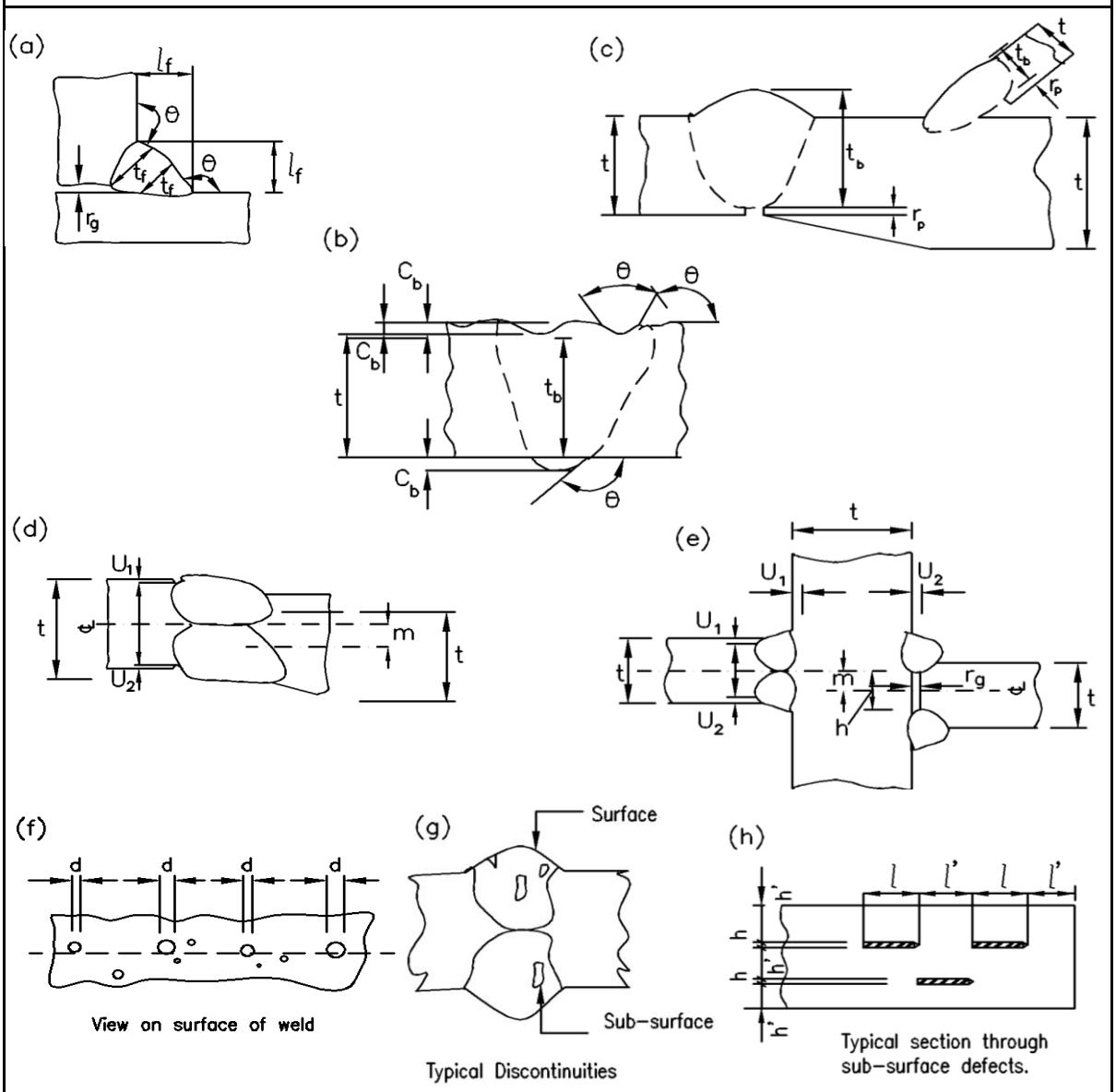

Notes:-

1. Where there are two limits for one dimension, both shall apply.
   All limits are peak values unless indicated as average.
2. Where a repair is necessary, an approved procedure must be used.
   If on increasing the scope of inspection, further non-conformances are found, the scope shall be increased to 100% for the joint type in question.
3. May be accepted up to the limits for slag lines if the joint is subjected to longitudinal shear only.
4. All welds to the same procedure.
5. Abbreviations:
   Av. 100 or Av. 50 indicates the average value over 100mm or 50mm length
   - ≮ Not less than
   - ≯ Not greater than
   - ∑ Sum of

8.0 WORKMANSHIP – BOLTING

8.1 Ordinary Bolted Assemblies

8.1.1 Bolt/Nut Combinations

The combinations of bolts and nuts shall be not less than the following:

4.6 Bolts with grade 4 nuts (BS 4190)

8.8 Bolts with grade 8 nuts (BS 3692)

10.9 Bolts with grade 12 nuts (BS 3692)

Any bolt assemblies which seize when being tightened shall be replaced.

8.1.2 Differing Bolt Grades

Different bolt grades of the same diameter shall not be used in the same structure, except when agreed otherwise by the S.O..

8.1.3 Bolt Length

The bolt length shall be chosen such that, after tightening, at least one thread plus the thread run-out will be clear between the nut and the unthreaded shank of the bolt and at least one clear thread shall show above the nut.

8.1.4 Washers

(i) When the members being connected have a finished surface protective treatment which may be damaged by the nut or bolt head being rotated, a washer shall be placed under the rotating part.

(ii) A suitable plate, or heavy duty, washer shall be used under the head and nut when bolts are used to assemble components with oversize or slotted holes.

8.1.5 Taper Washers

When the bolt head or nut is in contact with a surface which is inclined at more than 3˚ from a plane at right angles to the bolt axis, a taper washer shall be placed to achieve satisfactory bearing.

8.1.6 Galvanized Nuts

Nuts shall be checked after being galvanized for free running on the bolt and re-tapped if necessary to ensure a satisfactory tightening performance.

8.1.7 Bolt Tightening

Bolts may be assembled using power tools or shall be fully tightened by hand using appropriate spanners in accordance with BS 2583.

8.1.8 Fitted Bolts

Precision bolts to BS 3692 may be used as fitted bolts when holes are drilled or reamed after assembly so that the clearance in the hole is not more than 0.3mm.

8.2 Fit-up When Using Ordinary Bolts

8.2.1 Fit-up

Connected parts shall be firmly drawn together. If there is a remaining gap which may affect the integrity of the joint, it shall be taken apart and a pack inserted.

8.2.2 Reaming

Where parts cannot be brought together by drifting without distorting the steelwork, rectification may be made by reaming, provided the design of the connection will allow the use of larger diameter holes and bolts.

8.3 High Strength Friction Grip Assemblies

8.3.1 Bolt/Nut/Washer Combinations

BS EN 14399, as appropriate.

8.3.2 Tightening

The use of friction grip bolts shall comply with BS EN 1993-1-8.

Tightening which complies with BS EN 1993-1-8, may be by the torque control method, part-turn method, or with load indicating devices used in accordance with the manufacturer’s recommendations.

Whenever bolts and nuts are tightened by part turn method as in accordance with BS EN 1993-1-8, each nut shall be tightened, preferably with power operated wrench by amount given in Table E.

TABLE E – ROTATION OF BOLT AND NUT		
Nominal size & thread diameter of bolt	Grip of bolt for rotation of the nut (relative to the bolt shank)	
	Not less than ½ turn	Not less than ¾ turn
M 16 M 20 M 22	Up to 115mm	- Over 115 to 225mm Over 115 to 275mm
M 24 M 27 M 30 M 36	Up to 160mm	Over 160 to 350mm

For inspection purposes, a sample of at least 32 bolts shall be selected at random from a batch such as that comprised in the daily work of one gang. If the torque for any bolt is less than that found in calibration required to induce the correct shank tension, every bolt in the batch shall then be examined and tightened further.

8.3.3 **Calibration of Torque Equipment**

Torque spanners and other devices shall have a calibration check at least once per shift, and shall be re-calibrated where necessary in accordance with BS EN 1993-1-8.

8.3.4 **Discarded Bolt Assemblies**

If, after complete tightening, a bolt or nut has to be slackened off, the whole bolt assembly is to be scrapped.

8.4 **Fit-Up When Using HSFG Bolts**

8.4.1 **Fit-up**

Connected parts shall be firmly drawn together with all bolts partially tightened. The joints shall be then be examined and if there is any remaining gap which may affect the integrity of the joint, it shall be taken apart and a pack inserted before recommencing the tightening procedure.

8.4.2 **Reaming**

(i) Where parts cannot be brought together by drifting without distorting the steelwork, rectification can be made by reaming, provided that the design of the connection will allow the use of larger diameter bolts.

(ii) Calculations shall be made to demonstrate that the connection remains adequate for the forces in the connection.

9.0 WORKMANSHIP – ACCURACY OF FABRICATION

9.1 Permitted Deviations

Permitted deviations in cross section, length, straightness, flatness, cutting, holing and position of fittings shall be as specified in clauses 9.2 to 9.5 below (see clause 5.4.5 (i))

9.2 Permitted Deviations in Rolled Components after Fabrication (Including Structural Hollow Sections)

9.2.1 Cross Section after Fabrication

In accordance with the tolerances specified in Table A as appropriate

9.2.2 Squareness of Ends Not Prepared for Bearing

See also clause 6.3.3 (i).

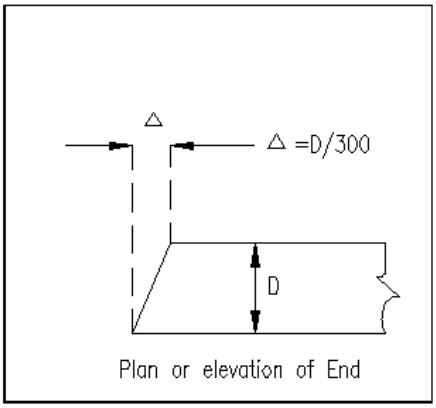

9.2.3 Squareness of Ends Prepared For Bearing

Prepare ends with respect to the longitudinal axis of the member. See also clause 6.3.3 (ii) and (iii).

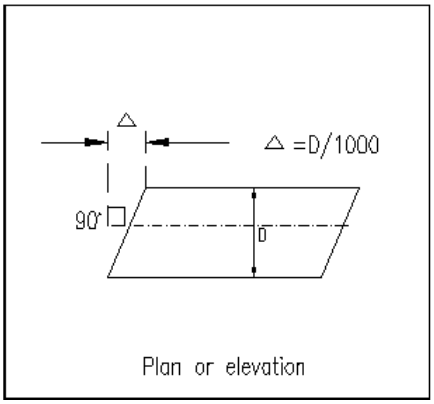

9.2.4 Straightness on Both Axes

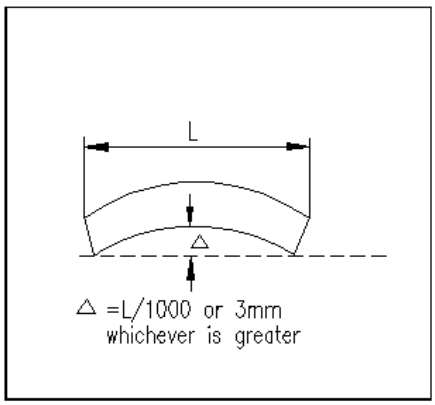

9.2.5 **Length**

Length after cutting, measured on the centre line of the section or on the corner of angles.

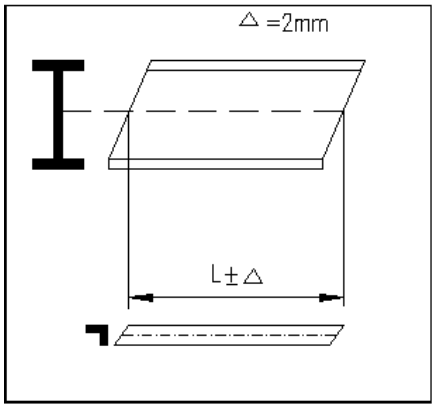

9.2.6 **Curved or Cambered**

Deviation from intended curve or camber at mid-length of curved portion when measured with web horizontal.

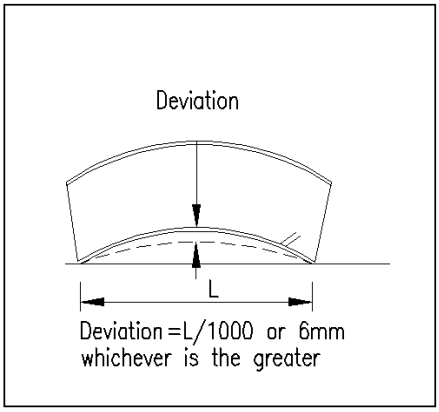

9.3 **Permitted Deviations for Elements of Fabricated Members**

9.3.1 **Position of Fittings**

Fittings and components whose location is critical to the force path in the structure, the deviation from the intended position shall not exceed Δ.

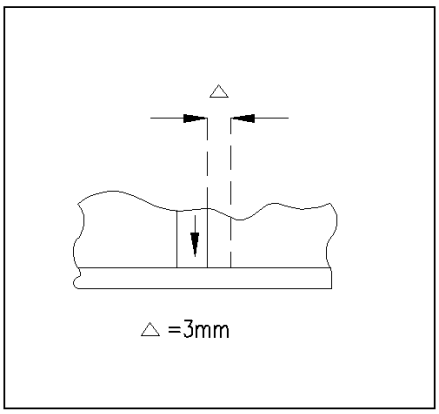

9.3.2 **Position of Holes**

The deviation from the intended Position of an isolated hole, also a group of holes, relative to each other shall not exceed Δ.

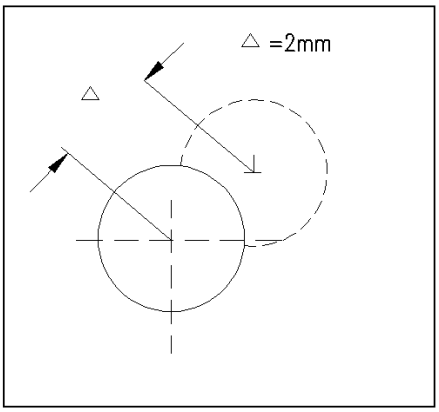

9.3.3 **Punched Holes**

The distortion caused by a punched hole shall not exceed Δ.
(see clause 6.6.3)

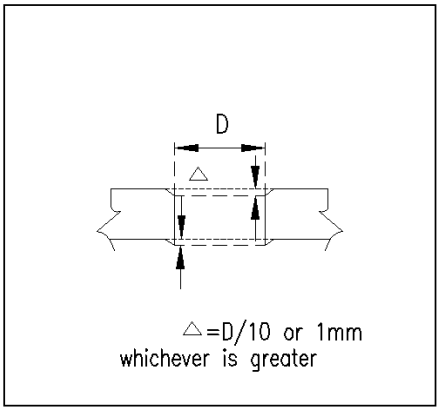

9.3.4 **Sheared or Cropped Edges of Plates or Angles**

The deviation from a 90˚edge shall not exceed Δ.

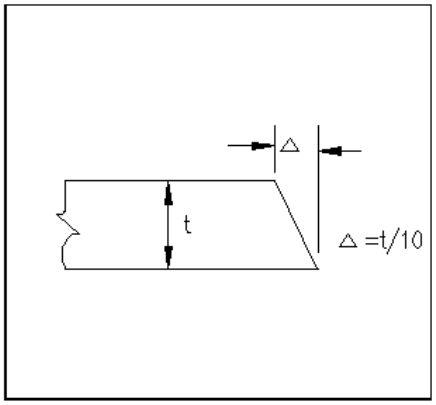

9.3.5 **Flatness**

Where bearing is specified, the flatness shall be such that when measured against a straight edge not exceeding one metre long, which is laid against the full bearing surface in any direction, the gap does not exceed Δ.

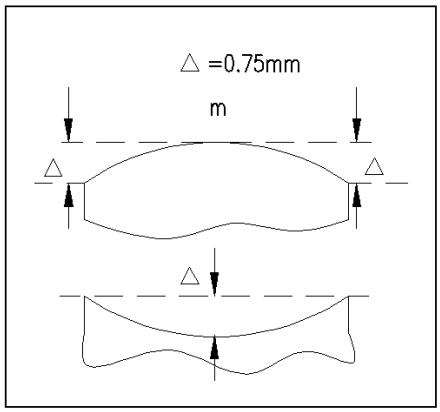

9.4 **Permitted Deviations in Plate Girder Sections**

9.4.1 **Depth**

Depth on centre line.

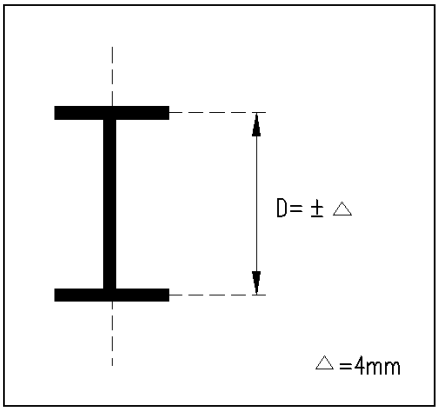

9.4.2 **Flange Width**

Width of B_w or B_n.

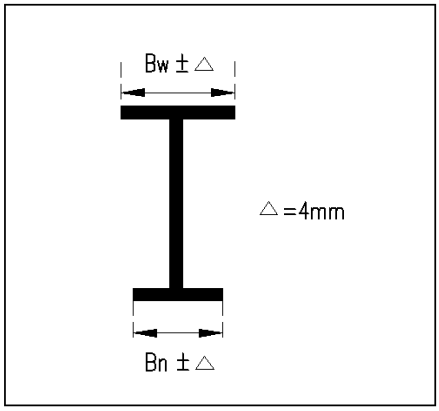

9.4.3 **Squareness of Section**

Out of Squareness of Flanges.

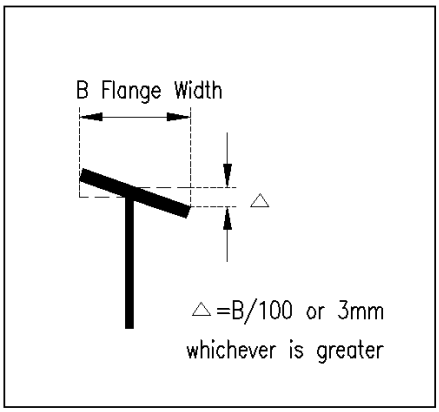

9.4.4 **Web Eccentricity**

Intended position of Web from one edge of flange.

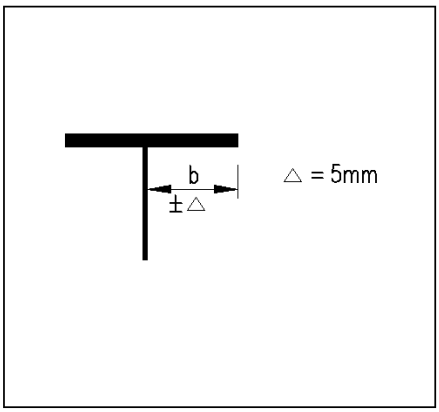

9.4.5 **Flanges**

Out of flatness.

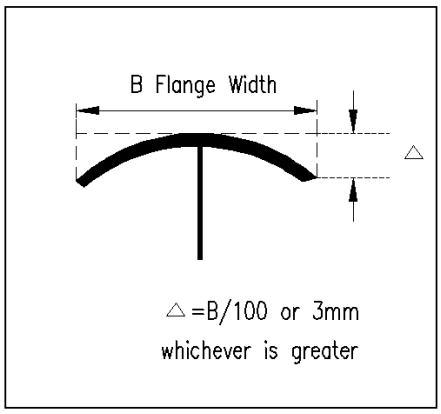

9.4.6 **Top Flange of Crane Girder**

Out of flatness where the rail seats.

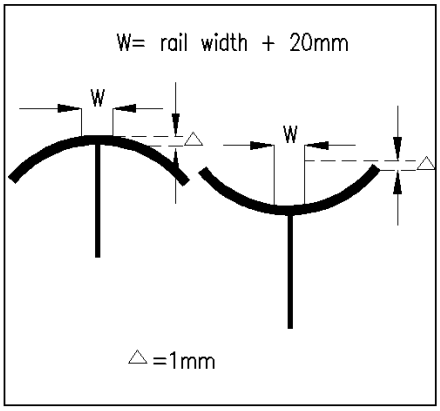

9.4.7 **Length**

Length on centre line.

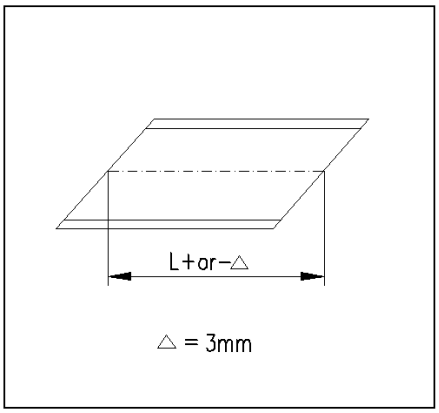

9.4.8 **Flange Straightness**

Straightness of individual flanges.

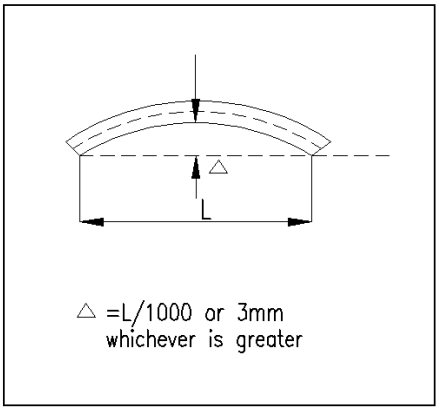

9.4.9 **Curved or Cambered**

Deviation from intended curve or camber at mid-length of curved portion, when measured with the web horizontal.

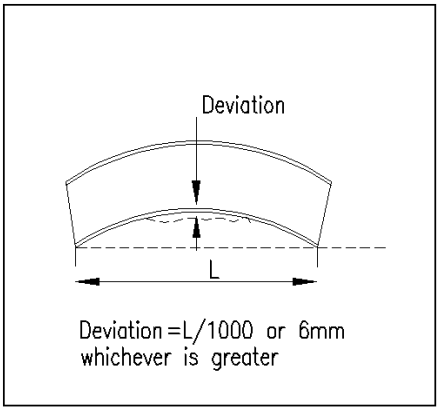

9.4.10 **Web Distortion**

Distortion on web depth or gauge.

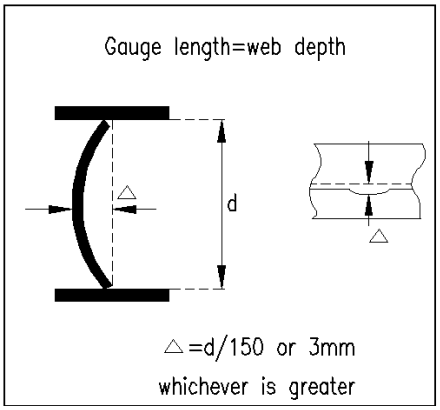

9.4.11 **Cross Section at Bearings**

Squareness of flanges to web.

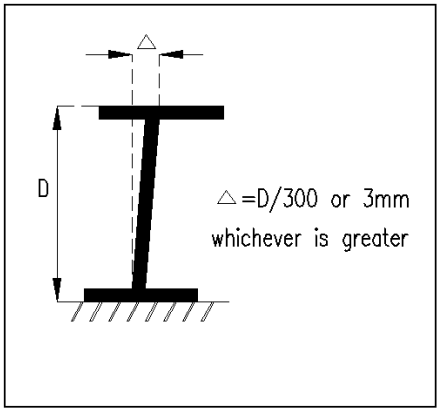

9.4.12 **Web Stiffeners**

Straightness of stiffener out of plane with web after welding.

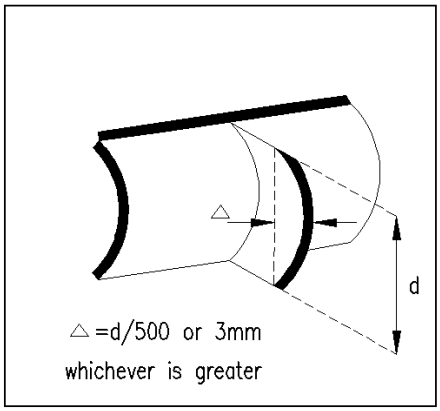

9.4.13 **Web Stiffeners**

Straightness of stiffener in plane with web after welding.

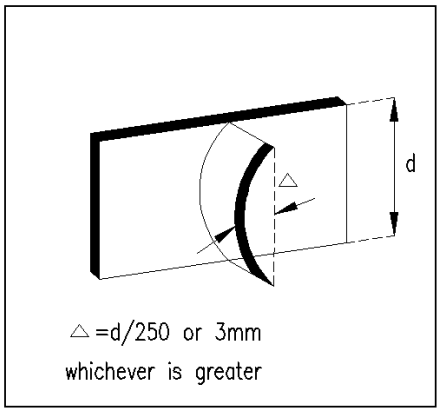

9.5 Permitted Deviation in Box Sections

9.5.1 Plate Widths

Width of B_f or B_w.

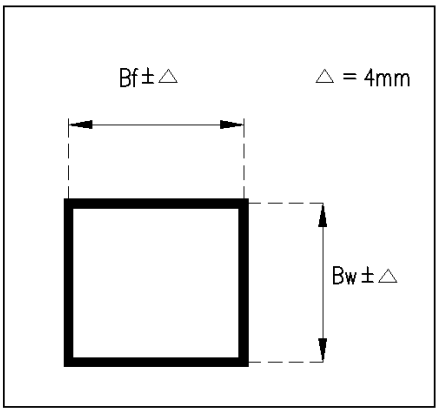

9.5.2 Squareness

Squareness at diaphragm positions.

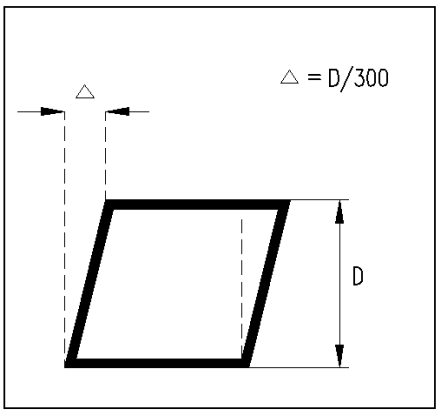

9.5.3 Plate Distortion

Distortion on width or gauge length.

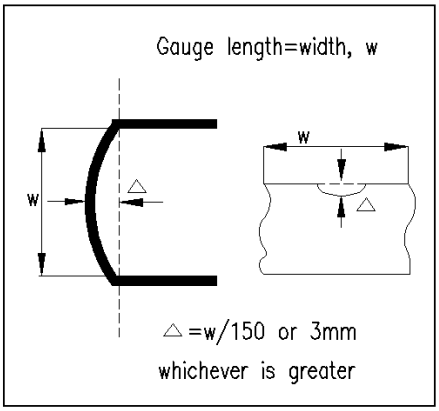

9.5.4 Web or Flange Straightness

Straightness of individual web or flanges.

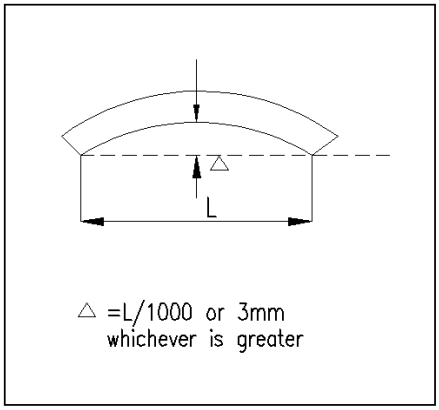

9.5.5 **Web Stiffeners**

Straightness in plane with plate after welding.

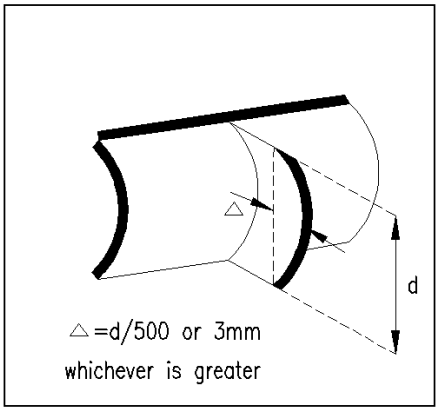

9.5.6 **Web Stiffeners**

Straightness out of plane to plate after welding.

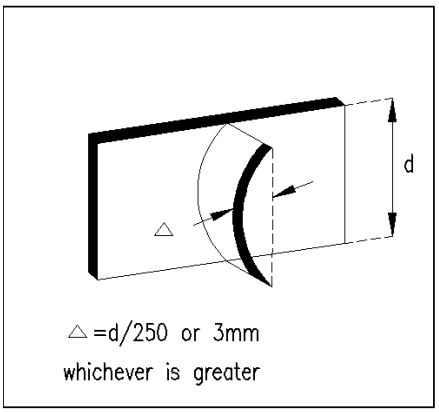

9.5.7 **Length**

Length on centre line.

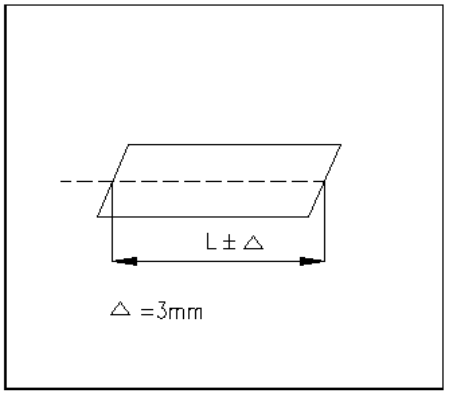

9.5.8 **Curved or Cambered**

Deviation from intended curve or camber at mid-length of curved portion when measured with the uncambered side horizontal.

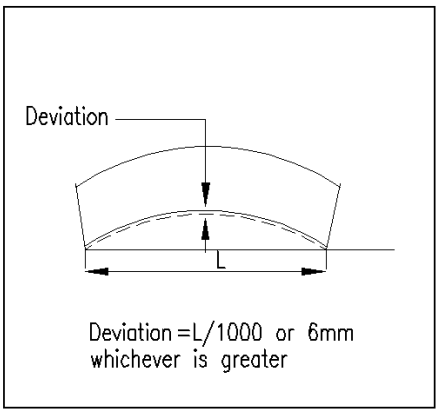

10.0 WORKMANSHIP – ERECTION

10.1 General

10.1.1 Erection Method Statement

The Contractor shall prepare and submit the method statement to the S.O. for approval at least two weeks before erection commences.

The Erection Method Statement which among others shall include the following:

(i) Pre-erection survey and formal acceptance of foundations;
(ii) Phased component delivery;
(iii) Safety and environmental controls;
(iv) Operative certification;
(v) Plant and equipment certification;
(vi) Inspection of each phase of construction.

10.1.2 Approval by the S.O.

Erection shall not commence before the method statement has been approved by the S.O..

10.1.3 Provision of Setting Out Lines by the Main Contractor

The Contractor shall provide and maintain setting out lines and datum levels within or immediately adjacent to the Works until the steelwork is approved.

10.1.4 Handling and Storage

Components shall be handled and stored in such a manner as to minimize the risk of surface abrasion and damage.

Fasteners and small fittings shall be stored under cover in dry conditions.

10.1.5 Damaged Steelwork

Any steelwork damaged during off-loading, transportation, storage or erection shall be restored to conform to the standards of manufacture as given in the Specification.

10.1.6 Column Base Plates and Slabs

(i) Steel packings shall be supplied to allow the structure to be properly lined and levelled and of sufficient size to avoid local crushing of the concrete.

(ii) Base packings shall be replaced so that they do not prevent subsequent grouting to completely fill all spaces directly under the base plates.

(iii) Base packs may be left permanently in place.

10.1.7 **Grouting**

(i) Grouting shall not be carried out under column base plates until a sufficient portion of the structure has been aligned, levelled, plumbed and adequately braced.

(ii) Immediately before grouting, the space under column base plates shall be clean and free of all extraneous matter.

10.2 **Site Conditions**

10.2.1 **Contractor's Responsibilities**

The Contractor shall:

(i) prepare plan showing width and level of access, level of the prepared working area for site traffic and cranes, and areas available for storage;

(ii) maintain the working surfaces of the Site free from standing water and remove water from foundations;

(iii) provide a firm, properly graded, working area and storage area; also maintain adequate access roads, into and through the site, for the safe delivery of plant and materials on normal road vehicles;

(iv) be aware of the position of any underground services which may be considered liable to damage by their plant;

(v) be responsible for removing overhead obstructions;

(vi) ensure that the load spread under cranes and lifting plant is commensurate with the strength of firm standing provided by the Contractor.

10.3 **Safety**

10.3.1 **Contractor's Responsibilities**

The initial planning, design, site management and procedures adopted for safe erection of the structure shall be in accordance with clause 2.0.

10.4 Stability

10.4.1 Temporary Restrains until Permanent Features are Built

(i) The Contractor shall design and provide the temporary bracing or restraints and ensure stability at all times. The design should be validated by P.E. and submitted for approval by the S.O..

(ii) The Contractor shall indicate positions on the structure where temporary bracing or restraints are necessary until walls, floors or other non-steel structures are built. He shall also provide details of the forces and moments in these elements.

10.4.2 Other Temporary Restraints used by Contractor

If the Contractor uses temporary restraints during erection which do not substitute for permanent features, they may be removed after the structure has been lined, levelled and plumbed provided that sufficient and/or permanent bracing has been erected to ensure the stability of the structure under the worst expected conditions of dead, imposed and wind loading.

10.5 Erection Loads

(i) The Contractor shall ensure that no part of the structure is permanently distorted by stacking of materials or temporary erection loads during the erection process.

(ii) The Contractor shall ensure that no other Sub Contractor shall place loads on the partly erected structure without his permission.

10.6 Lining and Levelling

10.6.1 Alignment of Part of the Structure

Each part of the structure shall be aligned as soon as practicable after it has been erected. Permanent connections shall not be made between members until the structure has been aligned, levelled, plumbed and temporarily connected to ensure that members will not be displaced during subsequent erection or alignment of the remainder of the structure.

10.6.2 Temperature Effects

Due account shall be taken of the effects of temperature on the structure and on tapes and instrument when measurements are made for setting out, during erection, and for subsequent dimensional checks. The reference temperature shall be 30˚C.

10.7 Site Welding

Site welding shall be carried out in accordance with Section 7.

Welding shall not be permitted during inclement weather, unless adequate protective measures are taken.

10.8 Site Bolting

Bolting shall be carried out in accordance with Section 8.

10.9 Certification Of Completion

When the steelwork, or portion of the steelwork, has been completed, the Contractor shall submit a signed certificate of to the S.O.. The completion of the certificate means the following:

(i) The Contractor's signature signifies that an inspection has been made to ensure that all connections are completed and that the steelwork is erected in accordance with this Specification and contract requirements.

(ii) The Contractor's signature signifies acceptance that the steelwork has been built in accordance with this Specification and the contract requirements.

11.0 WORKMANSHIP – ACCURACY OF ERECTED STEELWORK

11.1 Foundations

The Contractor shall inspect the prepared foundations and holding down bolts for position and level not less than seven days before erection of steelwork starts. He shall then inform the S.O. if he finds any discrepancies which are outside the deviations specified in clause 11.4 requesting that remedial work be carried out before erection commences.

11.2 Steelwork

Permitted maximum deviations in erected steelwork shall be as specified in clause 11.5 taking account of the following:

(i) All measurements be taken in calm weather, and due note is to be taken of temperature effects on the structure. (See clause 10.6.2).

(ii) The deviations shown for I-sections apply also to box and tubular sections.

(iii) Where deviations are shown relative to nominal centre lines of the section, the permitted deviation on cross-section and straightness, given in Section 9, may be added.

11.3 Information for Other Contractors

The Contractor shall inform other Sub Contractors engaged in operations following steel erection of the deviations acceptable in this document in fabrication and erection, so that they can provide the necessary clearances and adjustments.

11.4 Permitted Deviations for Foundations, Walls and Foundation Bolts

11.4.1 Foundation Level

Deviation from exact level.

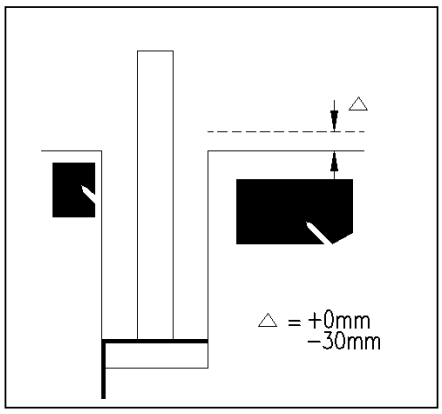

11.4.2 Vertical wall

Deviation from exact position at steelwork support point.

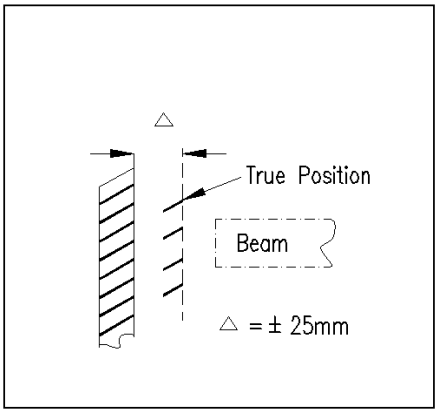

11.4.3 Pre-set Foundation Bolt or Bolt Groups when Prepared for Adjustment

Deviation from the exact location and level and minimum movement in pocket.

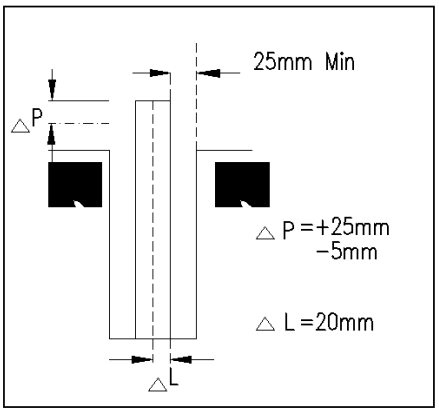

11.4.4 **Pre-set Foundation Bolt or Bolt Groups when Not Prepared For Adjustment**

Deviation from the exact location, level and protrusion.

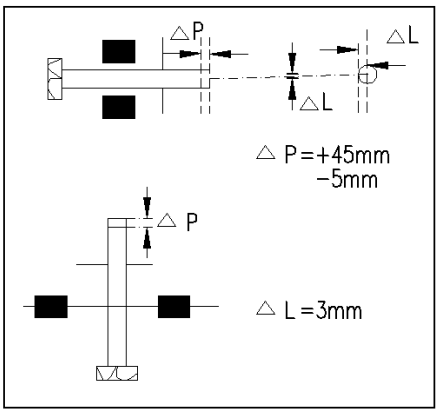

11.5 **Permitted Deviations of Erected Components**

11.5.1 **Position at Base of First Column Erected**

Deviation of section centre line from the specified position.

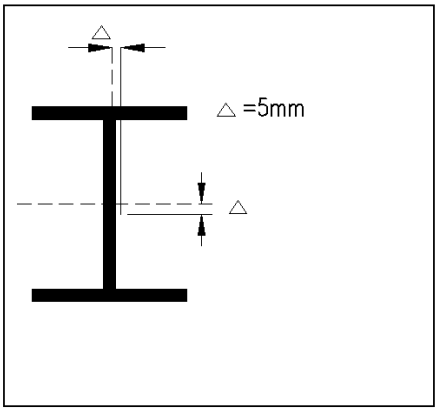

11.5.2 **Overall Plan Dimensions**

Deviation in length or width.

True overall dimension "L"
L<30 metres, Δ = 20mm
L>30metres,
Δ = 20mm+0.25(L-30)mm

where L is in metres

11.5.3 **Single Storey Columns Plumb**

Deviation of top relative to base, excluding portal frame columns, on main axes.

See clause 5.4.5 (iii) regarding pre-setting continuous frames.

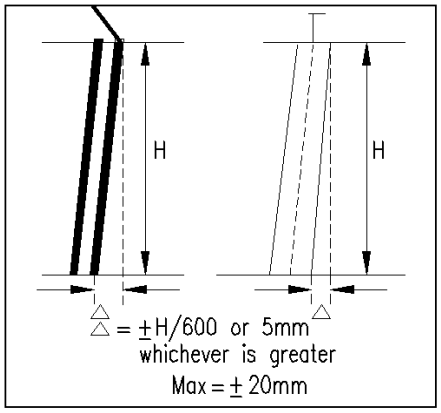

11.5.4 **Multi-storey Columns Plumb**

Deviation in each storey and
Maximum deviation relative to base.

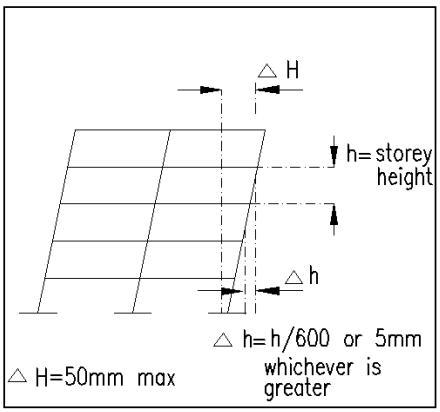

11.5.5 **Gap Between Bearing Surfaces**

(see clauses 6.3.3 (iii),8.2.1 and 9.2.3)

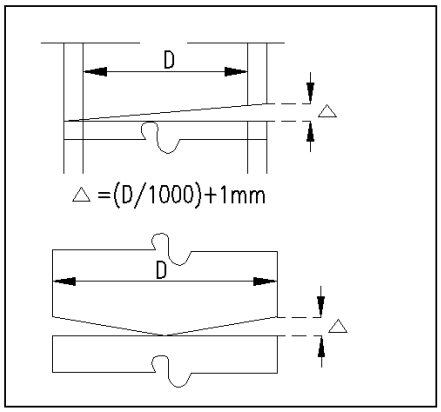

11.5.6 **Alignment of Adjacent Perimeter Columns**

Deviation relative to next column
on a line parallel to the grid line
when measured at base or splice level.

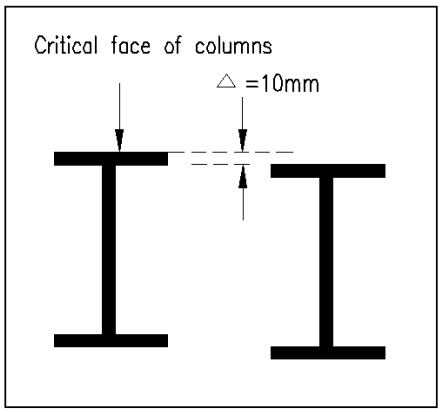

11.5.7 **Floor Beams Level**

Deviation from specified level at
supporting stanchion.

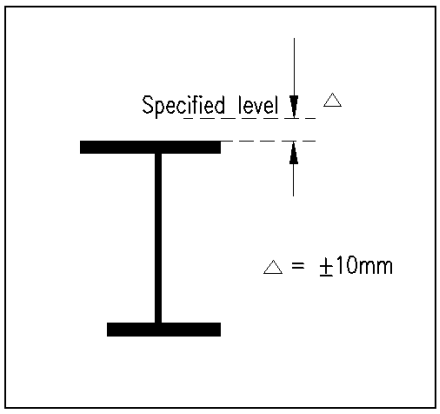

11.5.8 **Floor Beams**
Level at Each End of Same Beam

Deviation in level.

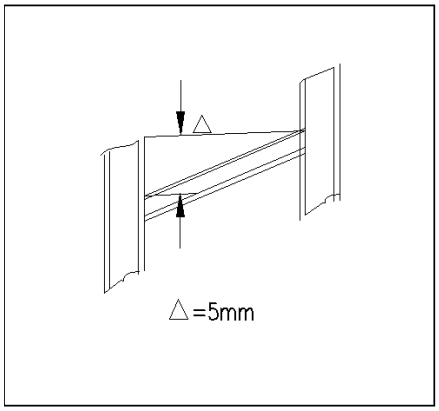

11.5.9 **Floor Beams**
Level of Adjacent Beams within a distance of 5 metres

Deviation from relative levels (measured on centreline, of top flange).

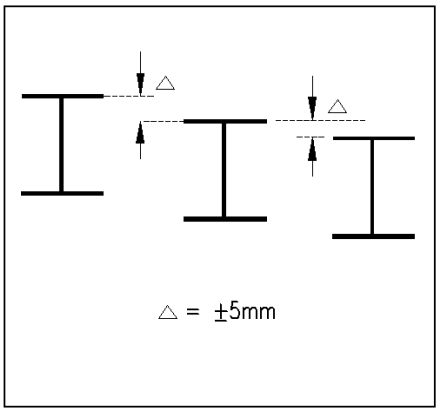

11.5.10 **Beams Alignment**

Horizontal deviation relative to an adjacent beam above or below.

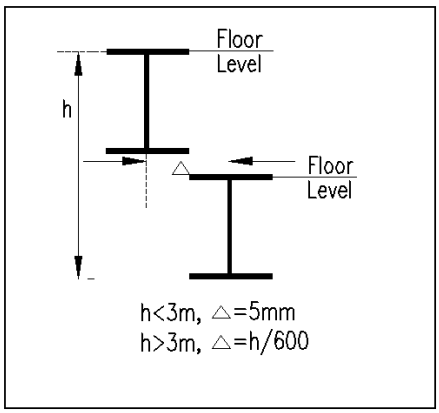

11.5.11 **Crane Gantry Columns Plumb**

Deviation of cap relative to base.

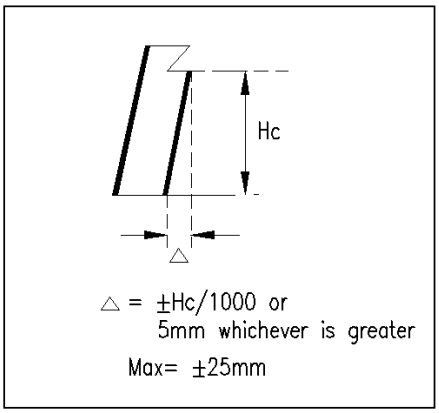

11.5.12 **Crane Gantries Gauge of Rail Tracks**

Deviation from true gauge.

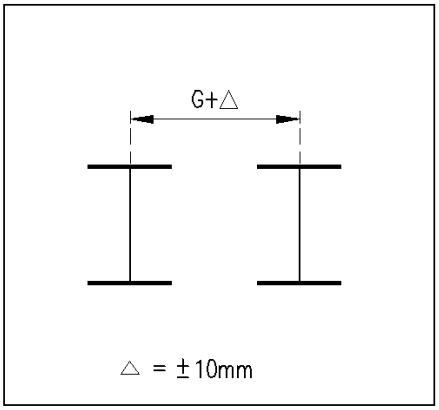

11.5.13 **Joints in Gantry Crane Rails**

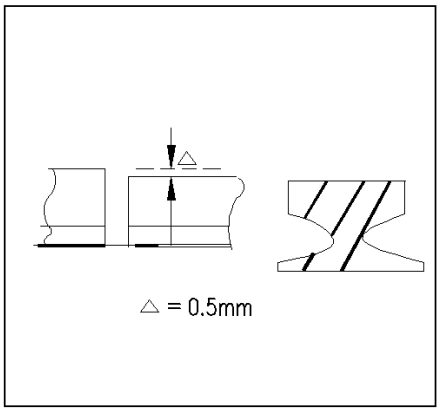

12.0 PROTECTIVE TREATMENT

12.1 General

12.1.1 Specification

The S.O. shall provide the Specification for surface preparation, off-site and Site protective treatments.

The specification for surface preparation, off site and site protective treatment shall be given to the S.O. after obtaining his approval to the type of protective treatment to be used.

12.1.2 Method Statement

The Contractor shall prepare a written method statement giving sequential details of the surface preparation and protective treatment procedure (including touching-in procedures) to be used in achieving the S.O.'s specification.

12.1.3 Working Conditions

Work shall be carried out in accordance with the recommendations given in relevant clauses BS EN ISO 12944 and BS EN ISO 14713.

12.1.4 Storage of Materials

Protective treatment materials shall be stored in a clean, dry area which is protected from extreme temperatures, and used in order of delivery, in accordance with the manufacturer's recommendations and within the advised shelf life.

12.1.5 Application Procedures

Materials shall be prepared, and coatings applied to surfaces, in accordance with the manufacturer's recommendations.

12.1.6 Handling and Storage

The materials shall be handled, stored and arranged so that the protected surface is unlikely to be damaged.

12.2 Surface Preparation

12.2.1 Wire Brushing

Surfaces which are not to be blast cleaned, but are to be coated, shall be wire brushed to remove loose mill scale, and cleaned to remove dust, oil and grease.

12.2.2 Blast Cleaning

(i) The standard of blast cleaning specified shall be in accordance with BS EN ISO 8501-1.

(ii) The methods used shall be capable of cleaning all surfaces of the component;

(iii) The surface roughness shall be compatible with that recommended for the coating to be applied.

(iv) The cleanliness levels specified shall be those existing at the time of the application of coating.

(v) When abrasives are recycled in the blast cleaning system, the equipment shall be fitted with a dust removal system to remove fines and contaminants.

12.2.3 Surface Defects

Surface defects revealed during surface preparation shall be dealt within accordance with clause 4.5 (ii) and (iii).

12.3 Sprayed Metal Coatings

12.3.1 Method

Sprayed metal coatings may consist of either zinc or aluminium applied to the surface as a molten dispersed spray in accordance with BS EN ISO 2063 to a level given in the Protective Treatment Specification.

12.3.2 Storage and Handling

The sprayed metal coatings shall be handled, stored and arranged so that the sprayed metal surface is unlikely to be damaged.

12.3.3 Repair of Extensively Damaged Areas

The area shall be cleaned using a needle gun or abrasive papers or cloths. After washing down and drying, the area shall be resprayed overlapping the undamaged area by 20mm.

12.3.4 Repair of Minimally Damaged Areas

An area less than $10cm^2$ may be repaired after cleaning, as described in clause 12.3.3, by applying a paint which is compatible and has similar properties to the metal spray.

12.3.5 Sealing Before Painting

Sprayed metal coating shall be sealed before the application of paint coats in accordance with BS EN ISO 12944 and BS EN ISO 14713.

12.4 Galvanizing

12.4.1 Procedures

Galvanizing shall be performed in accordance with BS EN ISO 1461.

12.4.2 Touch-up of Galvanized Surfaces

Small areas which are within 10mm of intact galvanized coating may be touched up in accordance with BS EN ISO 1461.

Preparation for touching up is to be as required by the manufacturer of the touch-up product.

12.4.3 Vent Holes

If so required by the S.O., vent holes in hollow members, necessary during the galvanizing process, shall be sealed after galvanizing with a plug of approved material.

12.5 Paint Treatments

12.5.1 Surface Condition Prior to Painting

Steelwork shall be dry and cleaned to the surface cleanliness specified in clause 12.2.1 or 12.2.2.

12.5.2 Surfaces to be Embedded in Concrete

Steel surfaces to be embedded in concrete shall be left unpainted and need not be blast cleaned unless required by the S.O.'s Specification.

12.5.3 Application Life

All paint products shall be used within the manufacturer's recommended pot life.

12.5.4 Multiple Coats

Where two or more coats of a product are to be applied, a different colour shade shall be used for each coat.

12.5.5 Stripe Coats

Additional stripe coats of primer or undercoat shall be applied in the following circumstances:

(i) to welded surfaces where a weld-through primer has been used;

(ii) to steelwork which will be exposed externally in the finished works, applied to all edges and corners, and to seal gaps between adjacent components such as shop and site bolted connections.

12.5.6 Storage and Handling

Storage and handling procedures shall ensure that damage to the protective system is minimized.

12.5.7 Painting on Site

Work shall not proceed when the steel surfaces are wet or the ambient temperature, or dew point, is below that recommended by the paint manufacturers. (See Working Conditions – clause 12.1.3).

12.5.8 Painting of Site Fixed Bolts and Welding

All protruding portions of bolt assemblies and site weld surfaces shall be cleaned to remove traces of oil, dust, welding flux etc. to the levels specified in 12.5.1.

An approved paint system shall be applied to ensure similar properties and compatibility with the surface treatment system being used on the surrounding surfaces.

Bolt assemblies which are supplied with a protective treatment need not be painted except when the S.O.'s specification requires it.

All coating materials used in protective treatment system must comply with the appropriate material standards listed below:

BS EN ISO 1461 (MS740)	Hot dip galvanized coatings on fabricated iron and steel articles. Specifications and test methods
BS 3698	Specification for calcium plumbate priming paints
BS EN 10300	Steel tubes and fittings for onshore and offshore pipelines. Bitumen hot applied materials for external coating
BS 4652	Specification for zinc rich priming paint (organic media)
BS 4800	Schedule of paint colours for building purposes
BS 4921	Specification for sherardized coatings on iron or steel
BS EN ISO 2063	Thermal spraying. Metallic and other inorganic coatings. Zinc, aluminium and their alloys

13.0 FIRE PROTECTION

Unless otherwise indicated in the drawings, all fire protection materials and systems must show evidence that they have been subjected to the fire resistance test in accordance with BS 476 and must be endorsed by the local Jabatan Bomba Dan Penyelamat Malaysia. The Contractor shall provide the manufacturer's Data Sheet of the material proposed which shall contain important information such as the characteristic and application techniques of the proposed material as formatted in Appendix 1.

The materials proposed shall be suitable and appropriate for the protection of the structural steel element wherever they are located whether internally or externally.

The materials supplied shall be free from defect and of equivalent quality to that supplied for testing and approval purposes. The materials shall be designed specifically for the fire protection of structural elements and shall be suitable for this purpose when applied/installed in accordance with the manufacturer's comprehensive instructions. The material shall be handled and stored as directed by the manufacturer and shall be applied/installed by a trained applicator/installer.

All fire protection works in progress shall be regularly monitored in order to eliminate the risk of defective workmanship or failures.
The use of intumescent coating systems to metallic substrates for providing fire resistance shall comprise a primer, an intumescent coating, a top sealer coat and/or a decorative coat.

The minimum thickness of any sprayed mineral coating type of fire protection materials applied shall be as in Table F below:-

Table F - Minimum Spray Thickness

Hp/A	Thickness in mm to provide fire resistance of:-					
	½ hour	1 hour	1 ½ hour	2 hours	3 hours	4 hours
150	10	12	25	36	57	79
170	10	13	26	38	60	83
190	10	13	27	40	63	87
210	10	14	28	41	65	90
Note : Hp - perimeter of section exposed to fire (m) A - Cross sectional area of the steel member (m^2)						

However, for any type of fire protection applied, the minimum thickness of protection to be applied and the minimum dry film thickness required shall strictly adhere to the requirement stated in the Data Sheet of the relevant proposed material.

APPENDIX 1

Data Sheet of Proposed Fire Protection Material

PRODUCT NAME	
1. Product Description 2. Name of Manufacturer 3. Name of Supplier 4. Protection Technique 5. Application Technique 6. Steel Preparation Requirements 7. Additional mechanical fixing or reinforcement 8. Nominal density 9. Thickness range 10. Fire resistance range 11. Constraints for fire resistance 12. Appearance 13. On Site Use 14. Durability	

ACKNOWLEDGEMENTS

Committee Members

Abd. Halim bin Ibrahim	Bahagian Struktur (Keselamatan)
Tan Lee Lian	Bahagian Struktur (Keselamatan)
Ir. Badioezaman bin Ab. Khalik	Bahagian Struktur (Bangunan Am)
Ir. Ayu Sazrina binti Sabari	Bahagian Struktur (Bangunan Am)
Lee Choon Siang	Bahagian Khidmat Pakar
Muhammad Abdul Syahid bin Saari	Bahagian Struktur (Kesihatan)
Mohd. Ghazali bin Semain	Bahagian Struktur (Kesihatan)
Mohd Kamarul Izwan bin Zainal Abidin	Bahagian Struktur (Pend. & Peng. Tinggi)
Amisah binti Ahwang	Bahagian Struktur (Pend. & Peng. Tinggi)
Wan Noor Atimmi binti Wan Abdul Majid	Bahagian Jambatan
Wong Thian Chiun	Bahagian Jambatan

Cover and Illustration

Noraini binti Zainol	Bahagian Struktur (Keselamatan)
Mohd Sharunizam bin Mohd Aludin	Bahagian Struktur (Keselamatan)
Ruzianie binti Azahri	Bahagian Struktur (Keselamatan)